Offered by
LASER LAB SOURCE

manufactured by

1450nm, 2mW Fiber-Coupled DFB Laser Diode
with Isolator, Photodiode, PM Fiber, FC/APC Connector

RLS / 1450NM-2MW-IPD-PMF

OPTICAL SPECIFICATIONS

- Output Wavelength: 1450 nm ±10 nm
- Output Power: 2 mW
- Spectral Width (FWHM): 0.3 nm
- Wavelength Temp. Coefficient: 0.09 nm/°C
- Beam Type: Gaussian Beam
- Laser Type: DFB (Distributed Feedback)
- Isolation: 30 dB (typ)
- Includes Integrated Photodiode

FIBER SPECIFICATIONS

- Fiber Type: Polarization Maintaining Fiber
- Polarization Extinction Ratio: 15 dB
- Fiber Core: 9 µm
- N.A.: 0.12
- Fiber Length: >80 cm
- Fiber Connector: FC/APC (Other Types Available; Inquire)
- Alignment: Slow Axis Aligned to FC Key

ELECTRICAL SPECIFICATIONS

- Threshold Current: 5 mA (typ)
- Operating Current: 35 mA (typ)
- Operating Voltage: 1.4 V (typ)
- Max LD Reverse Voltage: 2.0 V
- PD Current: 0.1 mA
- PD Reverse Voltage Max: 15 V

GENERAL SPECIFICATIONS

- Operating Temperature Range: -20°C – 50°C
- Recommended Operating Temp: 25°C
- Storage Temperature Range: -40°C – 100°C
- Lead Soldering Temperature: 260°C

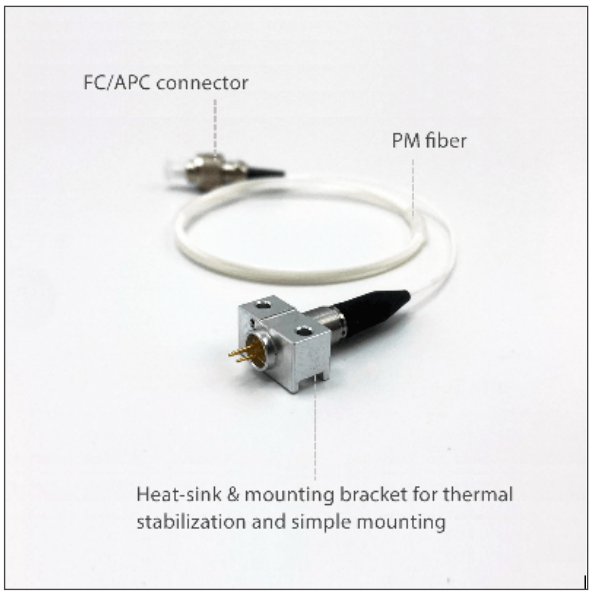

B86 Package and Pin Configuration with Photodiode

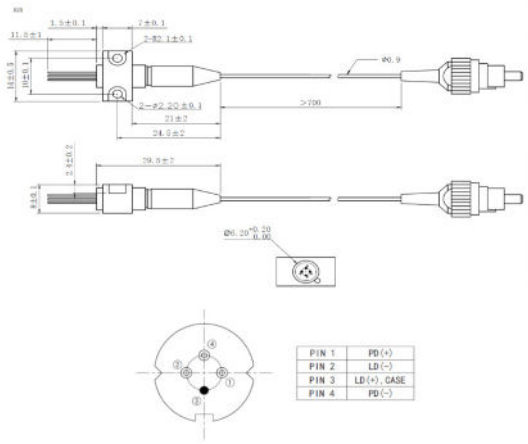

Laser Lab Source
a division of Research Lab Source Corporation

www.LaserLabSource.com
phone: 800-887-5065

670 South Ferguson
Bozeman, MT 59718